COR / AF Board ver. 7.2 (Link) for Mitrek receiver

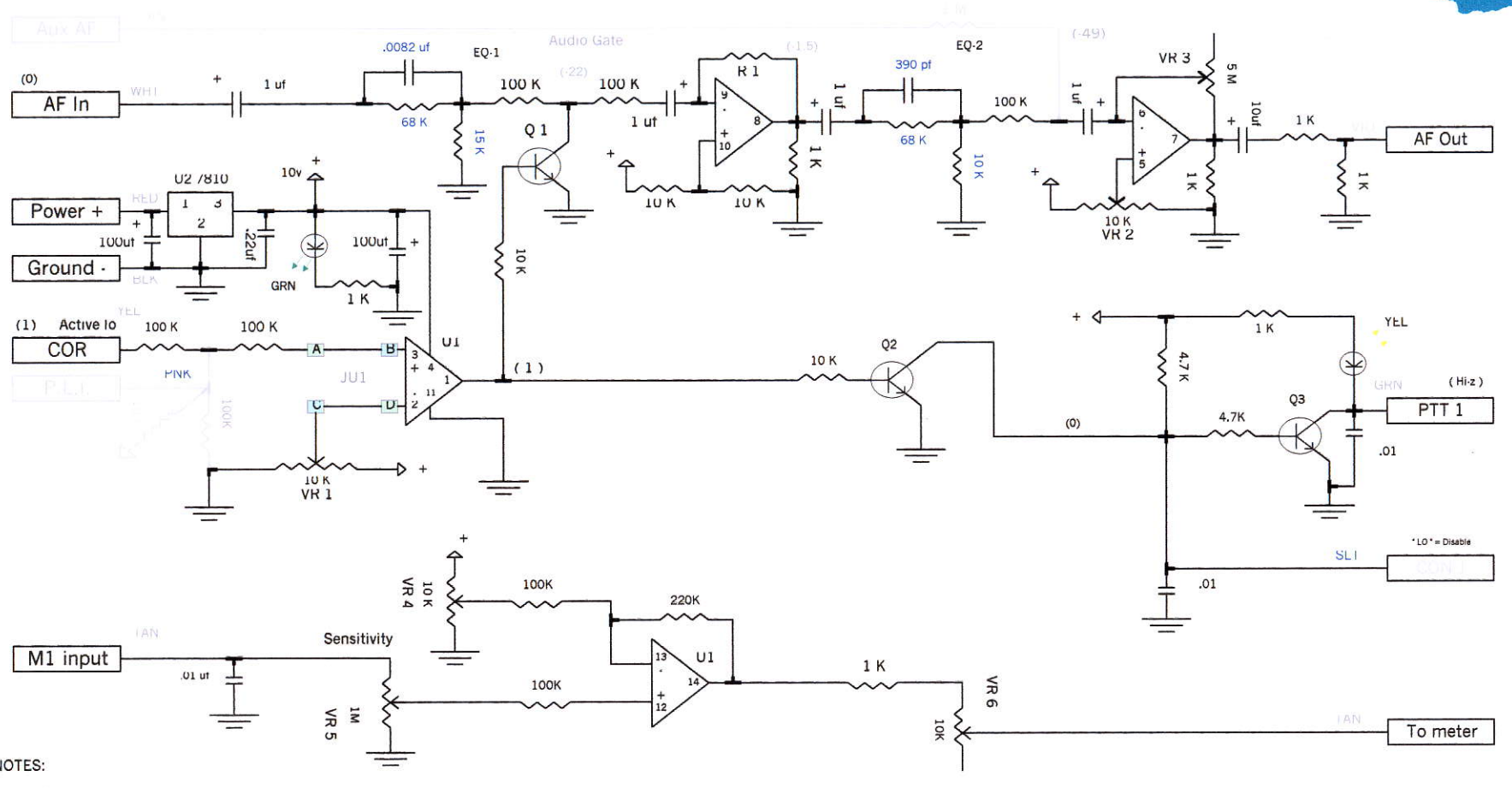

NOTES:

"S" Meter driver setup:
Input RF level of -100 dbm and set VR4 for 3.00v
Input RF level of -60 and set VR5 for FS on meter
DC Thres set. 5.24v+ * * for Mitreks

Grayed out areas=optional

PLI & Aux AF are normally not used

Q1 Q2	2N3904
Q3	2N3906
U1	LM324
U2	LM7810
CON	for "AND" Squelch

Wire Colors

		PTT 1 (out)	Yellow
Power 12v+	Red	PTT 2 (out)	Green
Ground	Black	CON	Pink
Disc in	White	CON 2	Brown
AUX AF in	Tan	AGC out	Tan
COR	Yellow	AGC in	Tan
P.L.I.	Pink	Speaker out	Blue
AF Out	Violet	Sec. out/ant 2	Pink

BRN can be sub for TAN

Drawing by: Karl Shoemaker